Model No. CF100D CORDLESS FAN

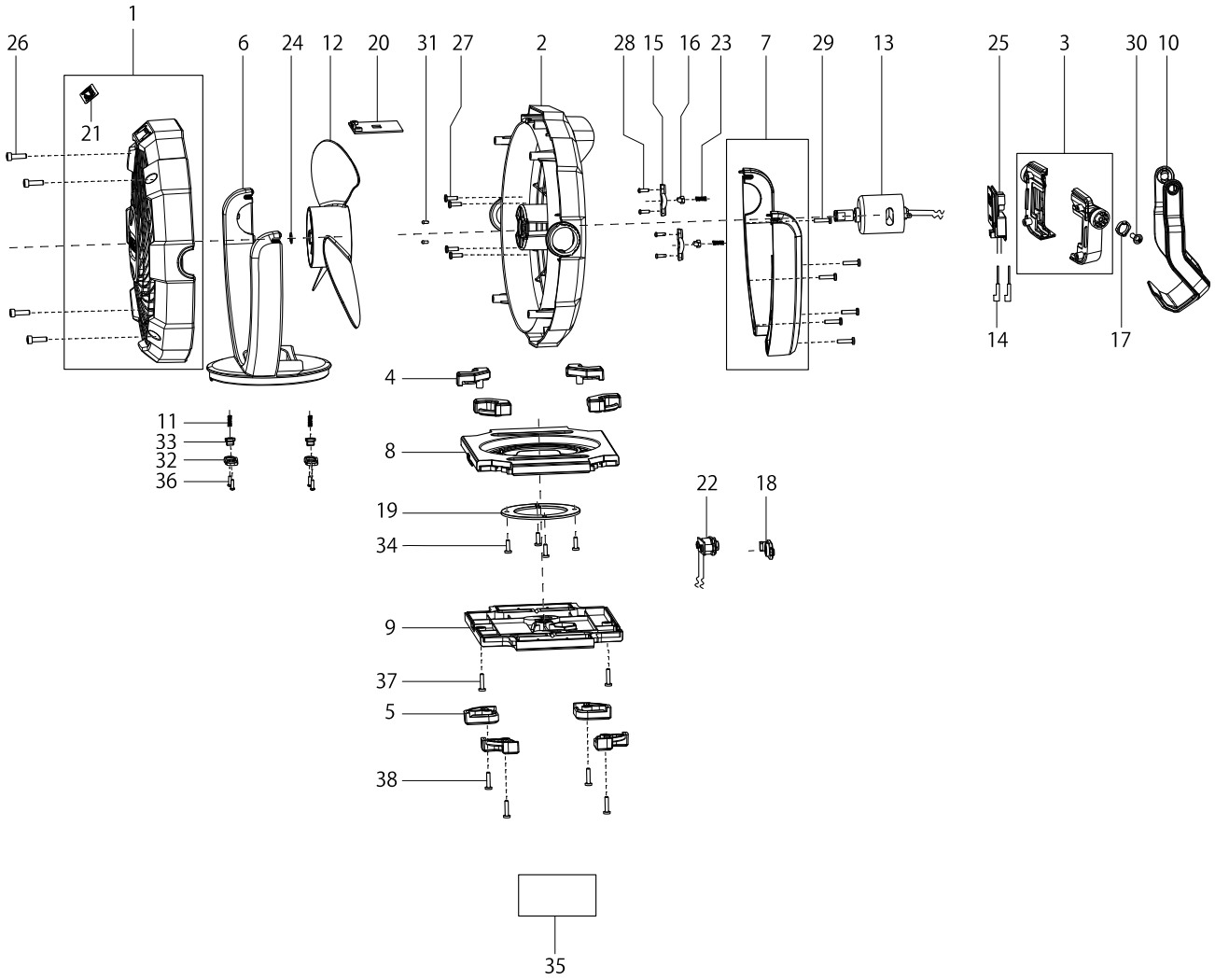

Model No. CF100D CORDLESS FAN

Item	Parts No.	Description	I/C	Qty	N/O	Opt. 1	Opt. 2	Note
001	TE00000177	FRONT COVER		1				
D10		INC. 21						
002	TE00000178	BACK COVER		1				
003	TE00000179	THE BATTERY HOUSING		1				
004	TE00000180	UP INSERT OF BOTTOM		4				
005	TE00000180	UP INSERT OF BOTTOM		4				
006	TE00000181	FRONT COVER OF THE STAND		1				
007	TE00000182	BACK COVER OF THE SUPPORT		1				
008	TE00000183	UP COVER OF THE BASE		1				
009	TE00000184	LOWER COVER OF THE BASE		1				
010	TE00000185	HOOK AND HANDLE		1				
011	TE00000197	SPRING1		2				
012	TE00000186	FAN BLADE		1				
013	TE00000187	MOTOR AND LEAD		1				
014	TE00000188	LEAD WITH INSERTING PIECE		2				
015	TE00000189	SMALL GEAR PRESSING PARTS		2				
016	TE00000190	SPARE PARTS FOR POM		2				
017	TE00000191	POM POSITION PART		2				
018	TE00000192	CHARGING SOCKET PLUG		1				
019	TE00000193	IRON PARTS FOR SUPPORT		1				
020	TE00000194	PCB		1				
021	TE00000195	SWITCH LABEL		1				
022	TE00000196	FIXED PART OF DC BASE		1				
023	TE00000198	SPRING2		2				
024	TE00000199	CIRCLIP		1				
025	644813-5	TERMINAL		1				
026	TE00000201	INNER HEXAGON 4X14		4				
027	TE00000202	SCREW 3X10		4				
028	TE00000203	SELF-TAPPING SCREW 2.5X8		4				
029	TE00000204	SCREW 3X14		6				
030	TE00000205	CROSS BELT PAD SCREWS 4X10		2				
031	TE00000206	P.H. SCREW M3X5		2				
032	TE00000189	SMALL GEAR PRESSING PARTS		2				
033	TE00000190	SPARE PARTS FOR POM		2				
034	TE00000202	SCREW 3X10		4				
035	TE00000229	RATING LABEL		1				
036	TE00000203	SELF-TAPPING SCREW 2.5X8		4				
037	TE00000204	SCREW 3X14		2				
038	TE00000204	SCREW 3X14		4				
039	TE00000211	ADAPTER		1				

Please order the parts with a part number.

Print Date 31/07/2017